Round Detail Sheet (Non Stock Round Fittings)

Pressure Class	Fittings	Material	Exposed	Const. Std.	Special Notes
☐ 1" ☐ 3" ☐ 5" ☐ 2" ☐ 4" ☐ 6"	☐ Spot Weld ☐ Mig Weld ☐ Seam Weld	☐ Galv ☐ Alum ☐ S.S. ☐ B.I.	☐ Yes ☐ No	☐ Smacna ☐ UMC	

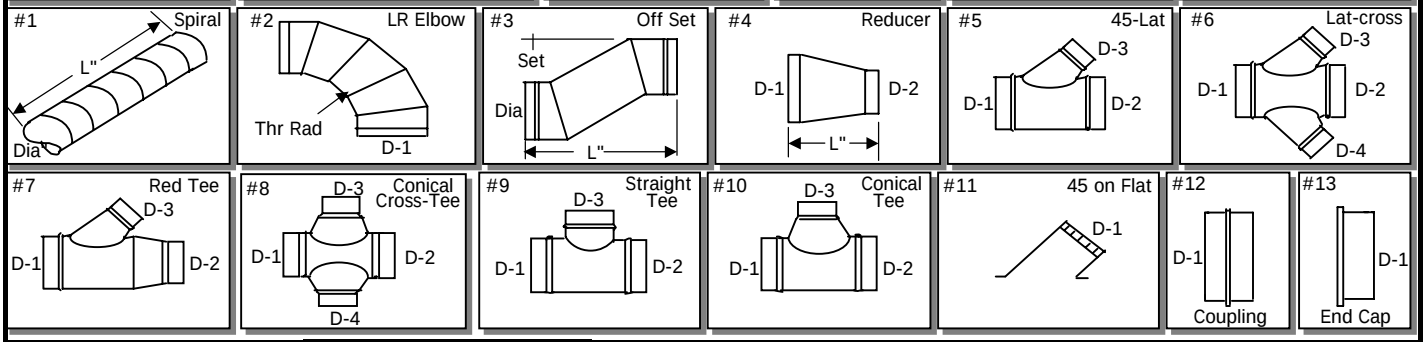

Ftg No.	Qty.	GA	Lgth L"	Dia D-1	Dia D-2	Dia D-3	Dia D-4	Off Set	Deg.	Thrt Rad	lined		Remarks	Field Tag #

Special Notes:

Job Number:
Job Name:
Job Address:
Foreman:
Date Sent: Date Needed:

ECO Products
5200 E. La Palma Ave.
Anaheim, Ca 92807
(714) 970-3828 Ph.
(714) 970-7884 Fax

ECO Duct
21005 Cabot Blvd.
Hayward, Ca 94545
(510) 670-0326 Ph.
(510) 670-0384 Fax

Batch Number

Sheet ____ OF ____